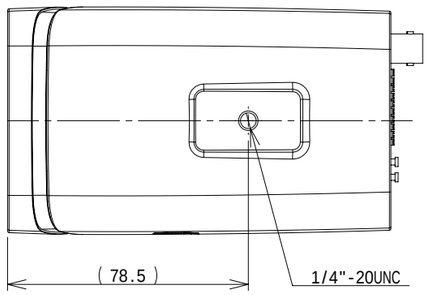

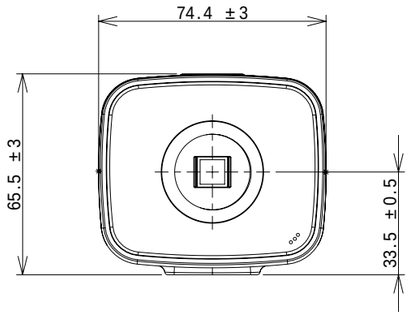

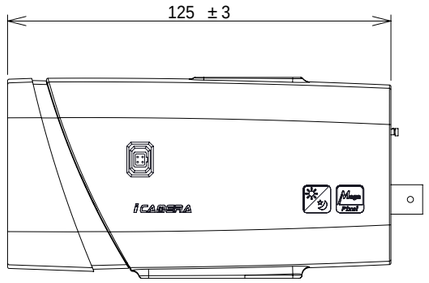

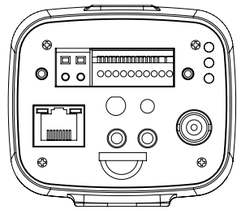

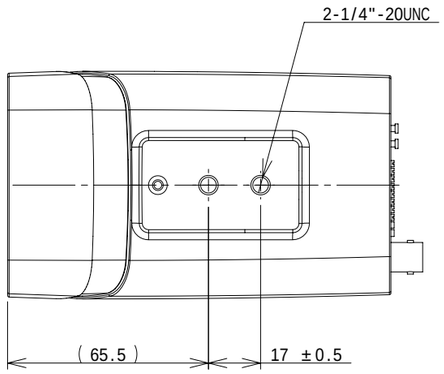

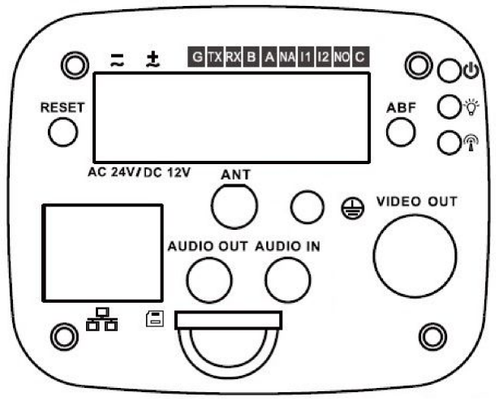

		APPROVED	2021/02/08	IPD-BX210-A
UNITS	mm	CHECKED	2021/02/08	TITLE (/)
SCALE	1:2	DRAWN	2021/02/05	WORK No. / DWG. No. KAB027273 / REV 00
		DESIGNED	2021/02/05	

Ikegami IKEGAMI TSUSHINKI CO., LTD.